6.b. Derive the efficiency for transformer coupled class A power amplifier with necessary diagram and wave form. List out its draw back.

Sol: In a transformer coupled class A power amplifier, Transformer is used to couple power amplifier to their loads.

The circuit diagram of transformed coupled class A power amplifier is shown below.

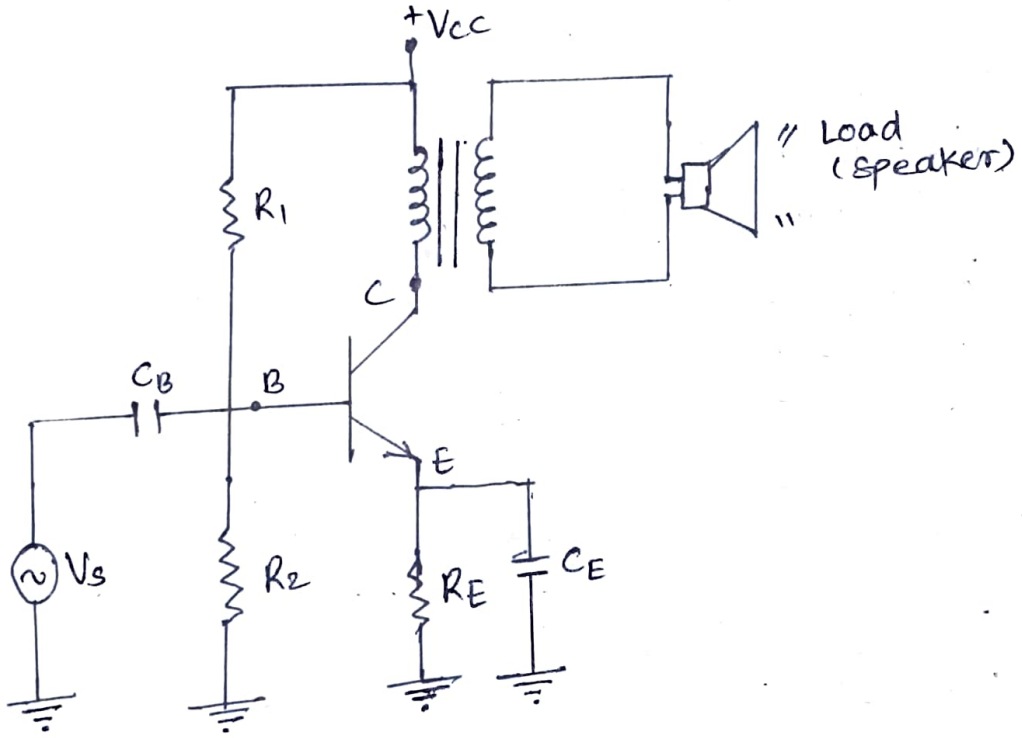

The wave form of transformer coupled class A power amplifier is:-

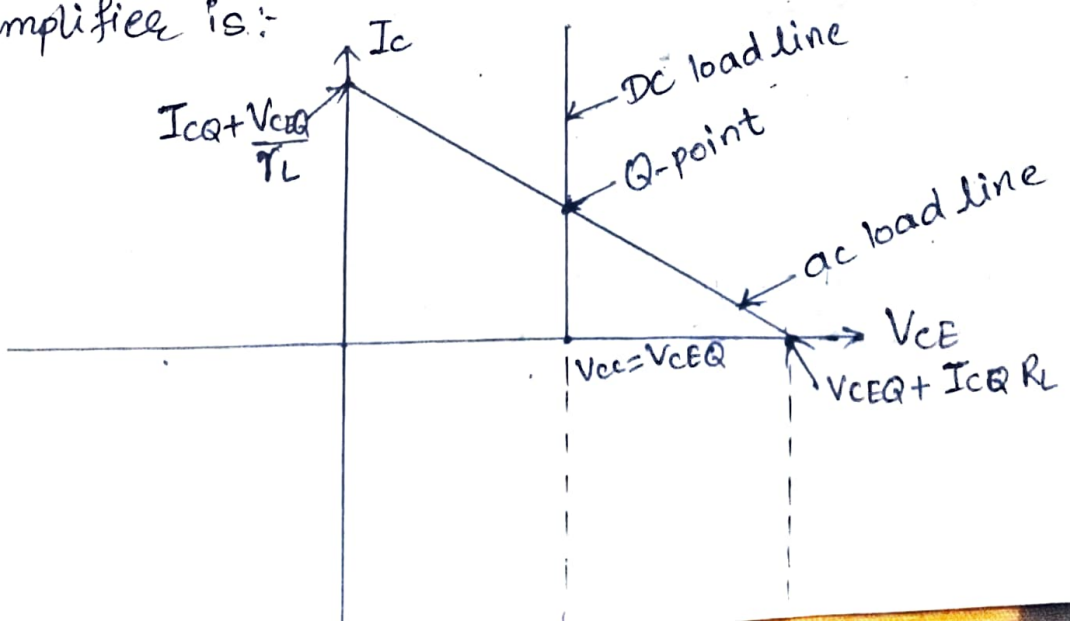

Here, we assume dc resistance of primary winding is infinitesimally small. The dc load line is almost vertical and then,

$$V_{CC} = V_{CEQ}.$$

The ~~resist~~ ac resistance (r_L) reflected to primary side is given by

$$r_L = \left(\frac{N_P}{N_S}\right)^2 \times R_L$$

where N_P and N_S are no. of turns in primary and secondary windings respectively.

The slope of ac load line is $-\frac{1}{r_L}$

Now, The efficiency η is given by

$$\eta = \frac{P_{out}(ac)}{P_{in}(dc)} \times 100\%$$

where $P_{out} = I_{c\,rms} \times V_{CE\,rms}$

$$= \frac{I_{cp}}{\sqrt{2}} \times \frac{V_{CEP}}{\sqrt{2}}$$

$$\therefore P_o = \frac{I_{cp} \times V_{CEP}}{2}$$

And $P_{in}(dc) = V_{CC} \times I_{CQ} = V_{CEQ} \times I_{CQ}$

Now,

$$\eta = \frac{I_{cp} \times V_{CEP}}{2(V_{CEQ} \times I_{CQ})} \times 100\%$$

$$= \frac{I_{CQ} \times V_{CEQ}}{2(I_{CQ} \times V_{CEQ})} \times 100\% \quad (\because I_{CQ} = I_{cp} \;\&\; V_{CEP} = V_{CEQ})$$

$$= \frac{1}{2} \times 100\%$$

$$\therefore \eta = 50\%$$

Hence, the maximum efficiency of transfer coupled class A power amplifier is 50%, which is twice of direct coupled class A amplifier.

5.a. "Large signal amplifier is also called power amplifier." Explain. For a class B amplifier providing a 10 V peak signal to the 20 Ω load and a power supply of $V_{cc} = 20$ V. Find the input and output power and efficiency of that amplifier.

Sol: The amplifier circuits which handle large input ac signal are called large signal amplifier. The large signal amplifiers are designed to provide a large amount of output ac power so that they can operate the output devices like speaker. Thus, large signal amplifier is also called power amplifier.

For a class B amplifier,

Given;

Peak voltage, $V_p = 10$ V

Load resistor, $R_L = 20\,\Omega$

DC power supply, $V_{cc} = 20$ V

Input power, $P_{in} = ?$

Output power, $P_o = ?$

Efficiency, $\eta = ?$

Now,

Peak Current, $I_p = \frac{V_p}{R_L} = \frac{10}{20} = 0.5$ A

$\therefore$ Input power, $P_{in(ac)} = \frac{2 I_p V_{cc}}{\pi} = \frac{2 \times 0.5 \times 20}{\pi}$

$= 6.366$ W

$\therefore$ Output power, $P_o(ac) = \frac{V_p}{\sqrt{2}} \times \frac{I_p}{\sqrt{2}} = \frac{10 \times 0.5}{2} = 2.5$ W

$\therefore$ Efficiency, $\eta = \frac{P_o(ac)}{P_{in}(dc)} = \frac{2.5}{6.366} \times 100\% = 39.27\%$

6

6.a. Show that the efficiency of direct coupled load class A amplifier is 25% with necessary circuit diagram and derivation.

Sol: The direct coupled class A amplifier is also called series fed power amplifier because the load is connected in series with transistor as shown in figure.

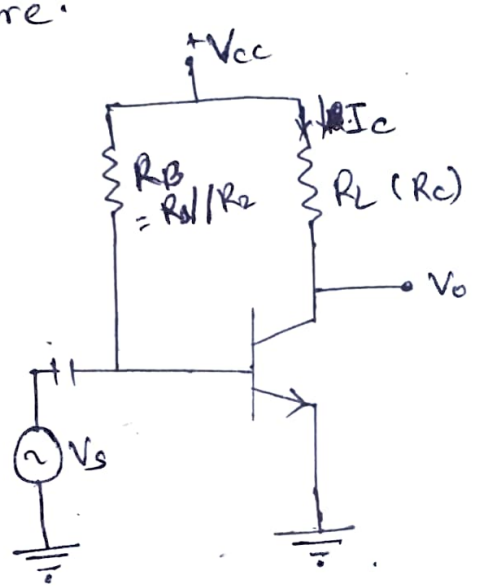

The transistor is biased in such a way that it's operating point lies in active region during a complete cycle.

The efficiency η is given by

$$\eta = \frac{P_o(ac)}{P_{in}(dc)} \times 100\%$$

where, $P_o(ac) = I_{crms} \times V_{CE\,rms}$

$$= \frac{I_{CP}}{\sqrt{2}} \times \frac{V_{CEP}}{\sqrt{2}}$$

$$\therefore P_o(ac) = \frac{I_{CP} \times V_{CEP}}{2}$$; (I_{CP} = peak collector current, V_{CEP} = peak collector-Emitter voltage)

And,

$$P_{in}(dc) = V_{CC} \times I_{CQ}$$

Now,

$$\eta = \frac{I_{CP} \times V_{CEP}}{2 \times V_{CC} \times I_{CQ}} \times 100\%$$

For maximum efficiency,

$V_{CEP} = \frac{V_{CC}}{2}$ and $I_{CP} = I_{CQ}$ and $V_{CEQ} = V_{CC}$

$$\therefore \eta = \frac{I_{CQ} \times V_{cc}/2}{2 V_{cc} \times I_{CQ}} \times 100\%$$

$$= \frac{100}{4}\%$$

$$\therefore \eta = 25\%$$

Thus, the maximum possible efficiency of a direct coupled class A amplifier is 25%.

Q.a. Draw class B amplifier and derive the expression of its efficiency.

Ans: The transistor operation is said to be class B power amplifier when the output current varies only during only one half cycle of a ~~sinusoidal wave~~ input signal.

The ~~da~~ transistor is biased in such a way that the operating point is set to the cut-off region.

The collector current flows for a half cycle only. so the ~~op~~ output waveform is highly distorted. The wave form is not suitable for audio ~~amp~~ application.

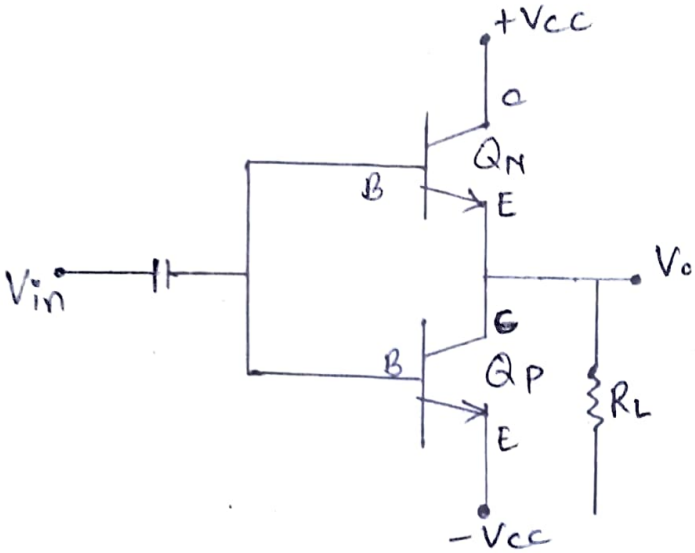

fig. Circuit diagram of class B amplifier.

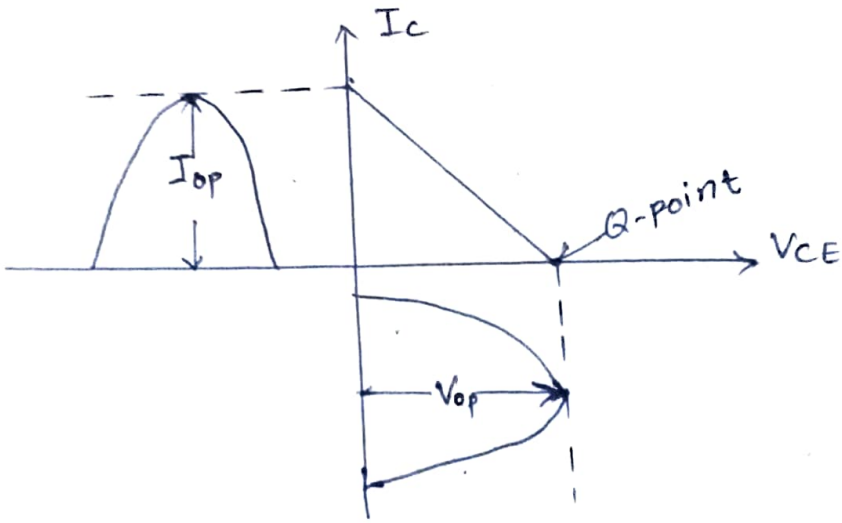

The efficiency η is given by

$$\eta = \frac{P_{in}(ac)}{P_{in}(dc)} \times 100\%$$

where,

$$P_o(ac) = \frac{I_{crms} \times V_{CE\,rms}}{2} \quad (\because \text{only one half wave})$$

$$= \left(\frac{I_{CP}}{\sqrt{2}} \times \frac{V_{CEP}}{\sqrt{2}}\right) \times \frac{1}{2}$$

$$\therefore P_o(ac) = \frac{(I_{CP} \times V_{CEP})}{4}$$

And, $P_{in}(dc) = V_{CC} \times I_{dc} = V_{CC} \times \frac{I_{CP}}{\pi}$

Now,

$$\eta = \frac{I_{CP} \times V_{CEP}}{4\left(V_{CC} \times \frac{I_{CP}}{\pi}\right)} \times 100\%$$

$$\therefore \eta = \frac{\pi\, V_{CEP}}{4\, V_{CC}} \times 100\%$$

For maximum efficiency,

$$V_{CEP} = V_{CC}$$

$$\therefore \eta = \frac{\pi\, V_{CC}}{4\, V_{CC}} \times 100\%$$

$$= \frac{100\pi}{4}\%$$

$$\therefore \eta = 78.5\%$$

Hence the maximum efficiency of class B amplifier is 78.5%. Ans

5. a. Briefly explain, the basic principle behind push-pull amplifiers. ~~Which~~ which class of amplifiers are most likely to experience cross-over distortion. explain with wave forms. What are the techniques to minimize it?

Sol Class B operation provides only half cycle output. ~~operation.~~ To obtain the full cycle output, two transistors conducting on opposite half cycle are used. one part of the circuit push the signals high during one half cycle and another part pulls the signals low during another half cycle of input. This arrangement is called push-pull amplifier.

In class B push pull amplifier, both transistors remain off until the magnitude of voltage at their base is less than 0.7V. During that period, there will be no output. As a result, output wave form will ~~be~~ not be pure sine form but is of distortion form. This type of distortion is called cross-over distortion.

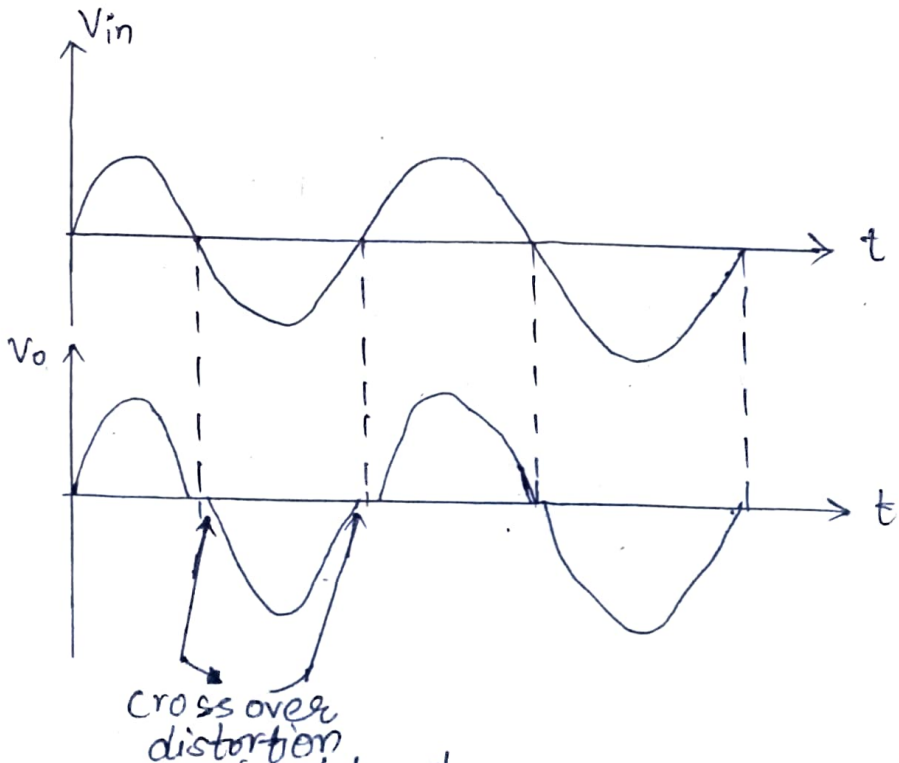

fig. waveform of pushpull amplifier.

Removal of cross over distortion:

Cross over distortion occurs due to non-conduction of both transistors when the signal is below 0.7 V. To minimize this, both transistors can be forward biased with small voltage. This type of operation is called class AB amplifier

In class AB operation, cross over distortion is eliminated by biasing each transistor slightly into conduction. When a small forward biasing voltage is applied across each emitter base junction, then it is no necessary for input signal to overcome the 0.7 V of emitter base junction before active operation can occur.

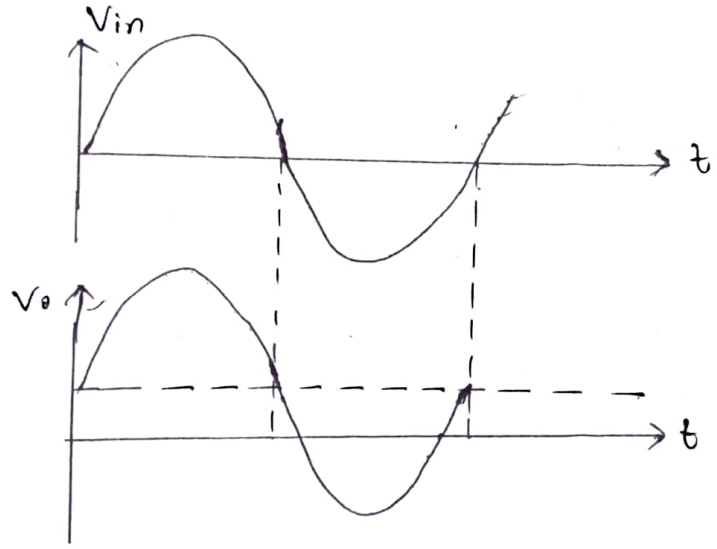

fig. class AB amplifier waveform.

6. a. " Efficiency of direct coupled load class A amplifier is half of collector efficiency ". Verify with necessary derivations.

Sol

i) For ~~maximum~~ direct coupled load class A Amplifier;

$$\text{Efficiency}, \eta_A = \frac{P_o(ac)}{P_{in}(dc)} \times 100\%$$

where, $P_o(ac) = I_{crms} \times V_{CE\,rms}$

$$= \frac{I_{cp}}{\sqrt{2}} \times \frac{V_{CEP}}{\sqrt{2}}$$

$$\therefore P_o(ac) = \frac{V_{cp} \times V_{CEP}}{2}$$

And $P_{in}(dc) = V_{cc} \times I_{dQ} = I_{cQ} \times V_{cc}$

Now,

$$\eta_A = \frac{V_{cp} \times V_{CEP}}{2(V_{cc} \times I_{cQ})} \times 100\%$$

$$\Rightarrow \eta_A = \frac{I_{cp} \times V_{CEP}}{2(I_{cQ} \times V_{cc})}$$

For maximum efficiency,

$$V_{CEP} = \frac{V_{cc}}{2} \text{ and } I_{cp} = I_{cQ}$$

$$\therefore \eta_A = \frac{I_{cp} \times V_{cc}/2}{2(I_{cp} \times V_{cc})} \times 100\%$$

$$= \frac{1}{4} \times 100\%$$

$$\therefore \eta_A = 25\%$$

ii) For collector efficiency, η_c;

$$\eta_c = \frac{P_o(ac)}{P_{in}(dc)} \times 100\%$$

where, $P_o(ac) = I_{crms} \times V_{CE\,rms} = \frac{I_{cp}}{\sqrt{2}} \times \frac{V_{CEP}}{\sqrt{2}}$

$$\therefore P_o(ac) = \frac{I_{cp} \times V_{CEP}}{2}$$

And $P_{in(dc)} = V_{cc} \times I_{CQ} - I_{CQ}^2 \times R_c$

$= (V_{cc} - I_{CQ} R_c)\, I_{CQ}$

Now,

$$\eta_c = \frac{\cancel{V_{CP} \times V_{CE}}\ I_{CP} \times V_{CEP}}{2(V_{cc} - I_{CQ} \times R_c)\, I_{CQ}} \times 100\%$$

For maximum ~~pos~~ efficiency,

$$I_{CP} = I_{CQ} = \frac{V_{cc}}{2R_c}$$

$$V_{CEP} = \frac{V_{cc}}{2}$$

$$\therefore \eta_c = \frac{I_{CP} \times V_{CEP}/2}{2\left(V_{cc} - \frac{V_{cc}}{2R_c} \times R_c\right) I_{CP}} \times 100\%$$

$$= \frac{V_{cc}}{4\left(V_{cc} - \frac{V_{cc}}{2}\right)} \times 100\%$$

$$= \frac{V_{cc}}{4 \times \frac{V_{cc}}{2}} \times 100\%$$

$$\therefore \eta_c = 50\%$$

Thus, $\boxed{\eta_c = 2\eta_A}$

Thus, the direct coupled load class A amplifier is half of collector ~~amp~~ efficiency.

Cross Over distortion and ~~Sink~~ Heat Sink:

In class B push pull amplifier, both transistors remains off until the magnitude of voltage at their base is less than 0.7 V. During that period, there will be no output. As a result output ~~warm~~ waveform will not be in pure sine form but ~~is~~ in distorted form. This type of distortion is known as cross over distortion.

~~Sink~~:
Heat Sink:

Semiconductor devices are cooled by conduction, radiation and other methodes.

Heat is conducted from a junction through the semi-conductor material and into the surrounding air. It also radiates surface of the device.

To remove the conduction and rediation of heat from device to the surrounding air, power devices are often equipped with heat sinks.

Power dissipation:

For common emitter amplifier, the total power dissipation at the junction is

$$P_d = V_{CB} I_C + V_{BB} I_C$$

$$\simeq V_{CE} \cdot I_C$$

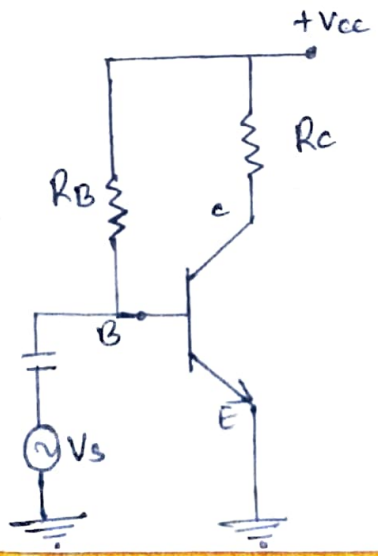

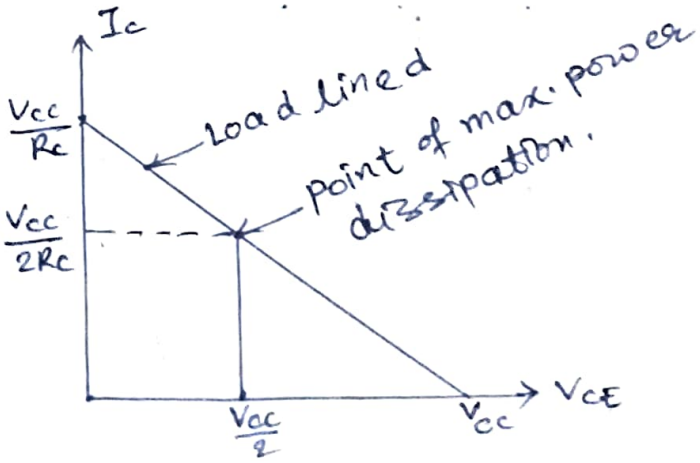

The point of maximum power dissipation is given by

$$V_{CE} = \frac{V_{CC}}{2}$$

$$I_C = \frac{V_{CC}}{2R_C}$$

Now,

$$P_{d\,max.} = V_{CC} \cdot I_C$$

$$= \frac{V_{CC}}{2} \times \frac{V_{CC}}{2R_C}$$

$$\therefore P_{d\,max} = \frac{V_{CC}^2}{4R_C}$$

<u>Wave form of Cross-Over distortion:</u>

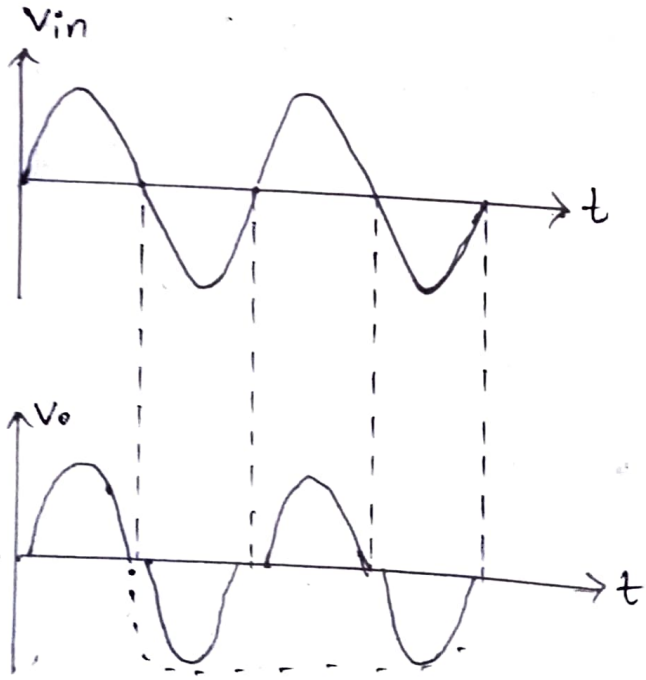

fig. Cross overdistortion